INSTRUCTION GUIDE : BST SERIES WHEELS

NEEDED:

Stan's NoTubes ZTR wheel set, 2 tires, Stan's NoTubes Tire Sealant, core remover tool, injector or 2 oz. bottle, floor pump or compressor, soapy water, safety goggles.

WARNING:

Always wear safely goggles, Sealant can stain clothes or furniture.

IMPORTANT NOTE:

Never inflate any tire without a tube above 40psi unless it is specifically labeled for tubeless use. Maximum pressure listed on your rims may differ from maximum pressure listed on your tires. Do not inflate above the lower of the two numbers.

1

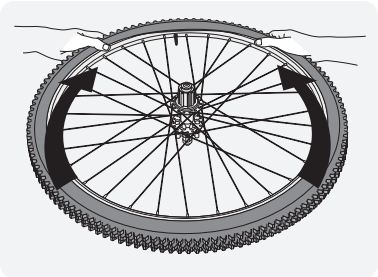

Mount tire: Making sure to position the tire bead in the center channel of the rim, mount one tire bead beginning opposite the valve and finishing at the valve. Once the first bead is mounted begin mounting the second bead opposite the valve and finish at the valve.

2

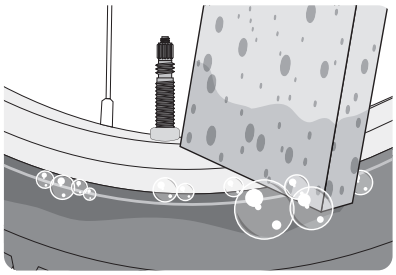

With a brush or sponge apply a generous amount of soapy water to both beads of the tire to help it slip onto the bead of the rim when inflating.

3

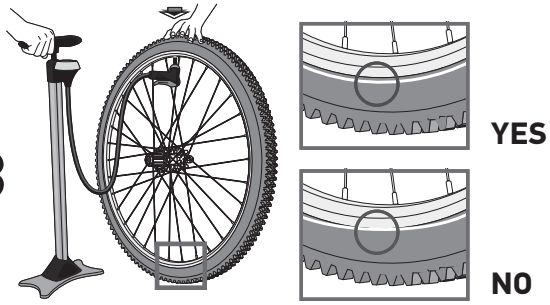

Rotate the valve to 12 o'clock and install a pump. Inflate tire to 35psi to seat tire.

4

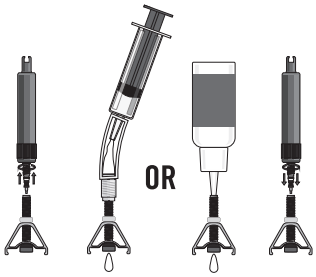

Add sealant: Once successful with inflation remove the valve core to add Stan's sealant. Add 2–4 oz. of sealant.

5

Inflate to preferred riding pressure. Always review the maximum pressure information listed on both the rim and the tire and consider the lower of the two numbers your maximum pressure. Do not inflate above the lower of the two numbers.

6

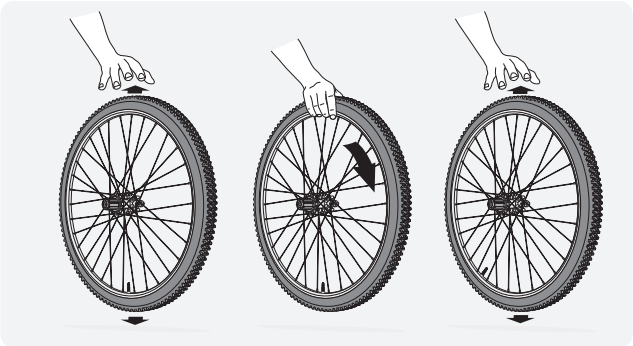

Bounce: hold the wheel vertically and gently bounce or "dribble" it to disperse the sealant throughout the inside of the tire. Let it drop from an inch or two, then rotate a few degrees and repeat. Do this for several revolutions of the wheel.

7

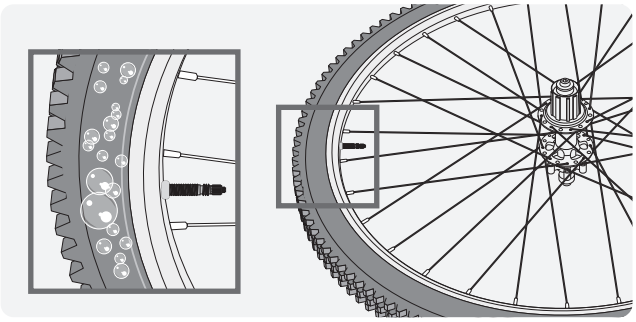

Lay tire on side and apply a thin sheen of soapy water around the sidewall and the bead area. Look for suds occurring anywhere on the tire or bead area. Suds bubbling out from the tire indicate porous areas. Shake the sealant to those areas to seal them and apply soap and water again. Check for suds forming on both sides of the tire. Repeat until no suds remain. Install the cassette and rotors according to the component manufacturer's recommendations.

STAN'S NOTUBES BST SERIES CARBON RIM SETUP GUIDE

RIMS	WEIGHT 26/27.5/29	ERD	MAX SPOKE TENSION (KgF)	STAN'S BUILD TENSION (KgF)	TAPE WIDTH	VALVE
Grail CB7	NA/NA/300g	NA/NA/602	105	105	25mm	35mm Presta
Crest CB7	NA/311/325g	NA/564/600	105	105	25mm	35mm Presta
Arch CB7	NA/450/475g	537/563/600	105	105	27mm	35mm Presta
Flow CB7	NA/420/455g	NA/564/602*	125	125	30mm	35mm Presta
Baron CB7	NA/420/455g	NA/564/602*	125	125	36mm	35mm Presta
Valor	278/301/325g	541/564/602	105	105	25mm	35mm Presta

***Flow CB7s feature a 4mm offset / Baron CB7s feature a 5mm offset**

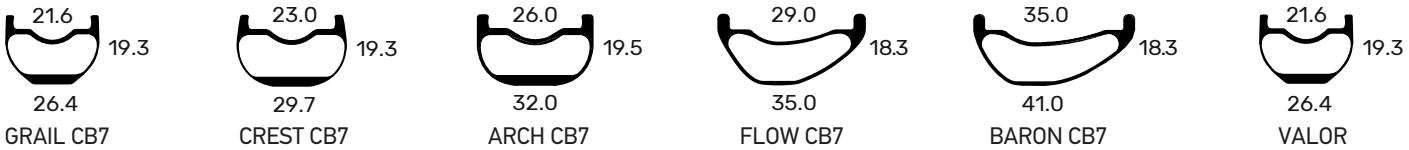

IMPORTANT: Stan's NoTubes strongly recommends all wheels be assembled by a professional wheelbuilder, according to the specific instructions we offer here.

- Before building, locate the lacing position decal and serial number found opposite the valve hole on the interior (tire side) of the rim and note proper build orientation. Stan's carbon rims are drilled asymmetrically and at specific spoke angles to maximum strength and minimize weight. Proper drive-side and non-drive side orientation and lacing are required.
- 3-cross lacing is strongly recommended for 28 and 32-hole builds. If building a 24-hole rim, 2-cross lacing is recommended. **Please note: 24-hole rims are intended for front use only.**
- Please note recommended tensions for each rim.
- Sapim Secure Lock locking nipples and Stan's SRD Spoke Powder are highly recommended.
- If assembling with Stan's hubs, spoke lengths can be found at: https://www.notubes.com/tech-docs
- Please record rim serial number before applying tape and register your carbon rim for warranty protection: https://www.notubes.com/warranty-info
- Tape installation and additional how-to videos are available at: https://www.notubes.com/help

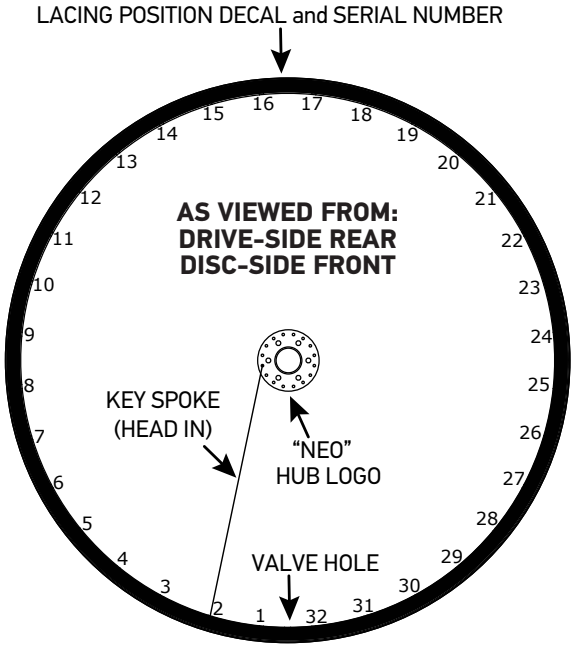

Caution: Stan's rims are optimized for tubeless use and designed to set up tubeless with Stan's Yellow Tape, Universal Valves, and Tire Sealant. Tubes may also be used on all Stan's rims; as with all tube installations, care must be taken to prevent tubes from being caught underneath the bead of the tire, causing the tire to dismount when inflated.

Rim Tape: Stan's NoTubes Yellow Rim Tape is designed for use with all Stan's rims. Use of other tapes is not recommended. BST rims require one layer of Yellow Tape. See above chart for tape width.

Tubeless Setup: Important: Never inflate any tire without a tube above 40psi unless it is specifically labeled for tubeless use. Maximum pressure listed on your rims may differ from maximum pressure listed on your tires. Do not inflate above the lower of the two numbers.

NOTUBES.COM • 202 Daniel Zenker Dr., Big Flats, NY14814 • (607) 562-2877 • sales@notubes.com